μPC55

General Purpose Operational Amplifier

GENERAL DESCRIPTION

The original source of the μPC55 is 709, the first general purpose monolithic operational amplifier. It features low offset voltage drift, high output swing under load and low power consumption. The device displays excellent temperature stability and will operate over a wide range of supply voltages.

FEATURES

- μA709 Direct Replacement

EQUIVALENT CIRCUIT

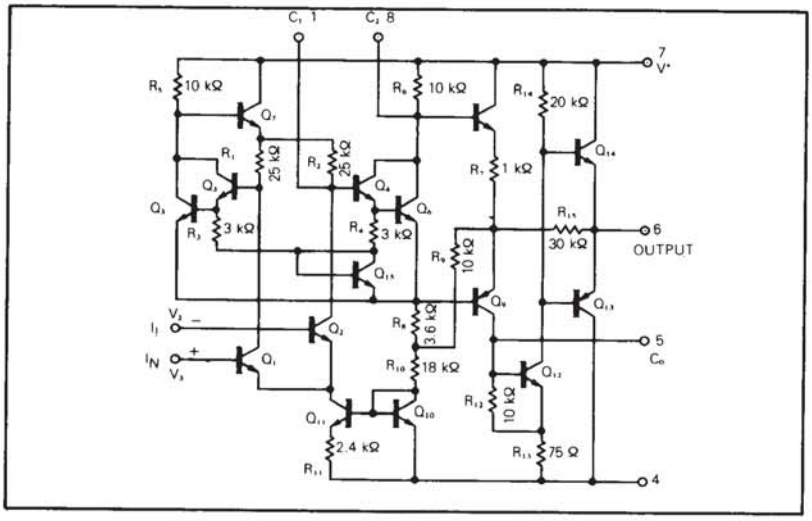

ORDERING INFORMATION

μPC55A

:8 pin Metal Can Package

μPC55D

8 pin Ceramic DIP
(Dual In-Line Package)

CONNECTION DIAGRAM (Top View)

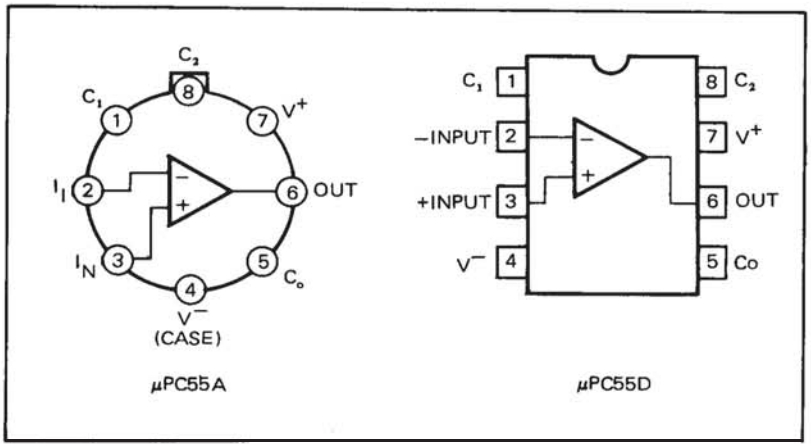

m-eps.jp

ABSOLUTE MAXIMUM RATINGS (Ta = 25°C)

PARAMETER		μPC55	UNIT
Voltage between V^+ and V^-		36	V
Differential Input Voltage		±6	V
Input Voltage		±10	V
Power Dissipation	A or D Package	300 Note 1	mW
Output Short Circuit Duration		5	s
Operating Temperature Range	A or D Package	−20 to +80	°C
Storage Temperature Range	A Package	−65 to +175	°C
	D Package	−55 to +150	

Note 1 Full Temperature Range

ELECTRICAL CHARACTERISTICS (Ta = 25°C $V^{\pm}$ = ±9V to ±18V)

CHARACTERISTIC	MIN.	TYP.	MAX.	UNIT	CONDITIONS
Input Offset Voltage		0.5	5	mV	$R_S \leqslant 10\ k\Omega$
Average Input Offset Voltage Drift		2	20	μV/°C	$R_S \leqslant 50\ \Omega$
Supply Voltage Rejection Ratio		25	100	μV/V	$V^{\pm}$ = ±15V, $R_S \leqslant 10\ k\Omega$
Input Bias Current		180	800	nA	
Input Offset Current		20	200	nA	
Average Input Offset Current Drift		0.1		nA/°C	
Input Impedance	100	400		kΩ	
Common Mode Input Resistance		10^8		Ω	
Output Resistance		150		Ω	
Power Consumption		80	150	mW	$V^{\pm}$ = ±15 V
Large Signal Voltage Gain	20000	42000		–	$V^{\pm}$ = ±15 V, V_O = ±10V
Output Voltage Swing	±12	±14		V	$V^{\pm}$ = ±15V, $R_L \geqslant 10\ k\Omega$
	±10	±13		V	$V^{\pm}$ = ±15V, $R_L \geqslant 2\ k\Omega$
Common Mode Input Voltage Range	±9	±10.3		V	$V^{\pm}$ = ±15V
Common Mode Rejection Ratio	70	90		dB	

Standard Connection Method

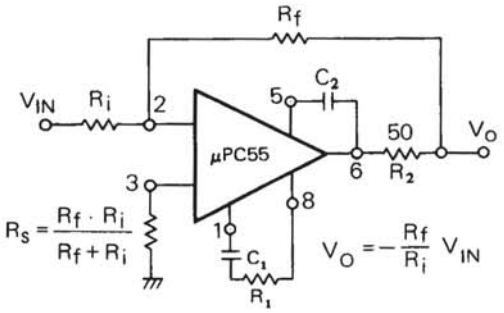

R_2 is necessary when the amplifier is operated with capacitive loading.

	R_f/R_i	C_1 (pF)	C_2 (pF)	R_1 (kΩ)
A	1000	10	3	0
B	100	100	3	1.5
C	10	500	20	1.5
D	1	5000	200	1.5

Each frequency characteristics is shown in Page 27.

m-eps.jp

TYPICAL PERFORMANCE CHARACTERISTICS (Ta=25° C)

VOLTAGE TRANSFER CHARACTERISTICS

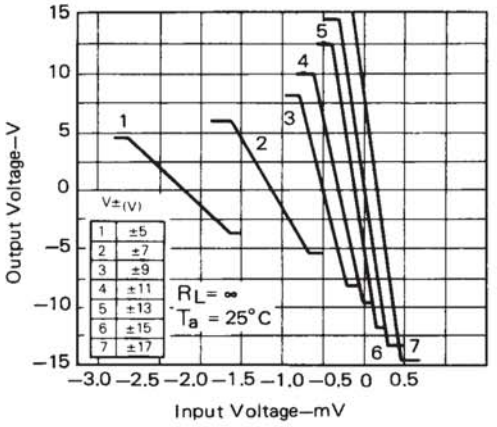

VOLTAGE TRANSFER CHARACTERISTICS

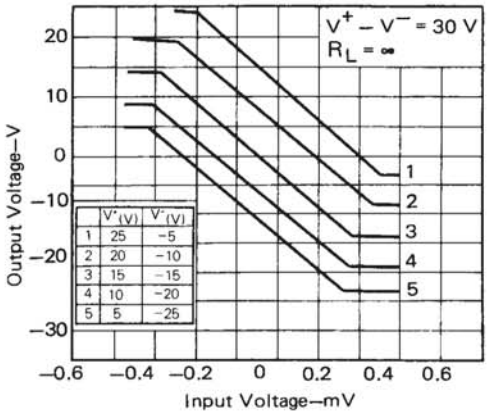

VOLTAGE TRANSFER CHARACTERISTICS

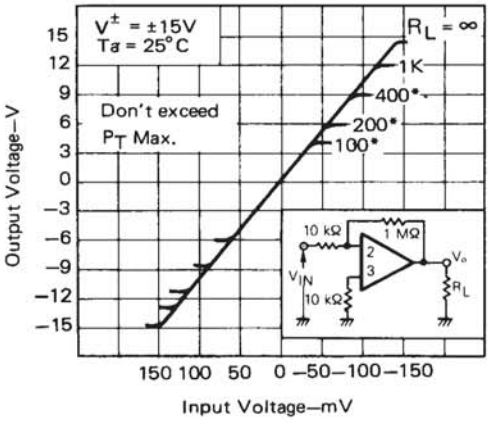

INPUT OFFSET VOLTAGE

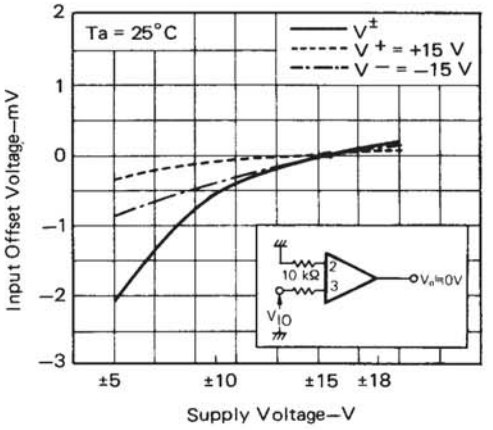

INPUT BIAS CURRENT & VOLTAGE GAIN

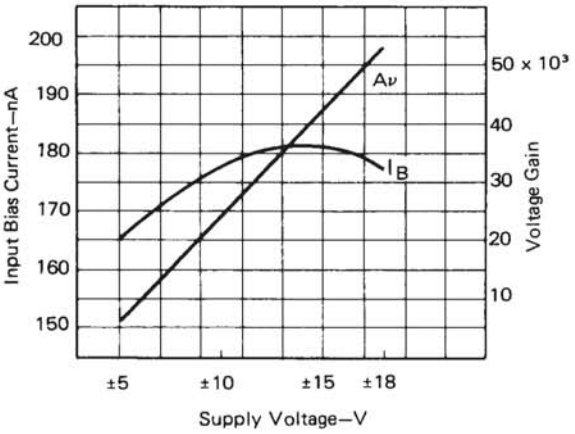

COMMON-MODE INPUT VOLTAGE & SUPPLY CURRENT

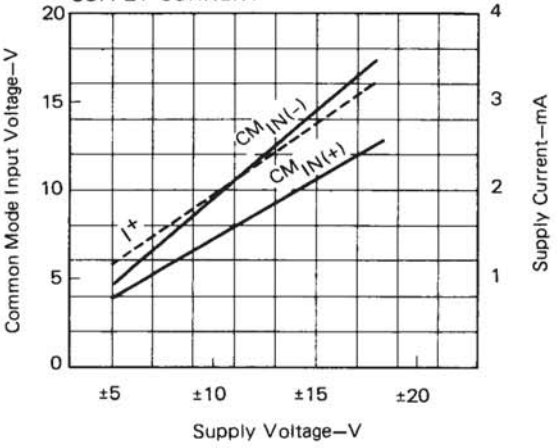

m-eps.jp

INPUT BIAS CURRENT & VOLTAGE GAIN

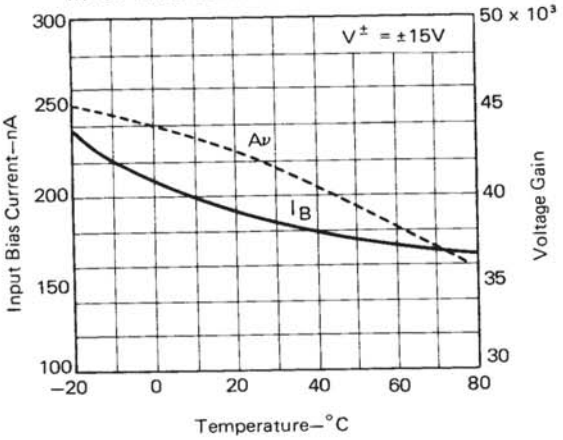

ADJUSTMENT FOR INPUT OFFSET VOLTAGE

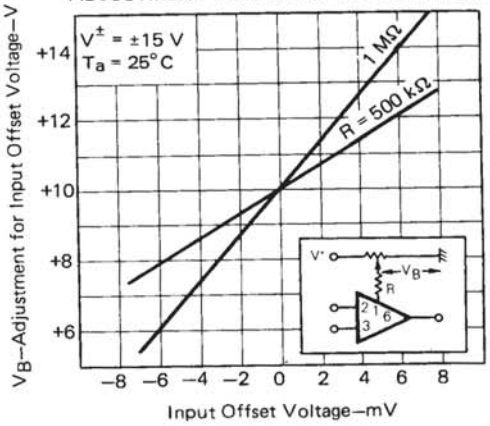

FREQUENCY RESPONSE

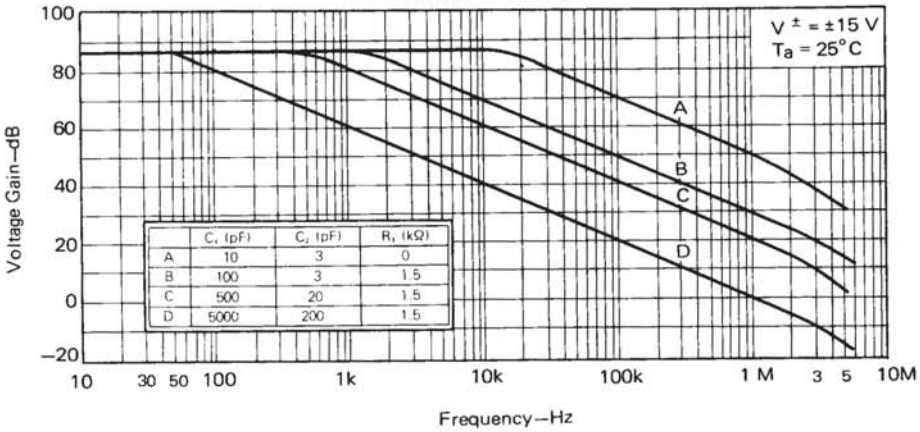

	C_1 (pF)	C_2 (pF)	R_1 (kΩ)
A	10	3	0
B	100	3	1.5
C	500	20	1.5
D	5000	200	1.5

LARGE SIGNAL FREQUENCY RESPONSE

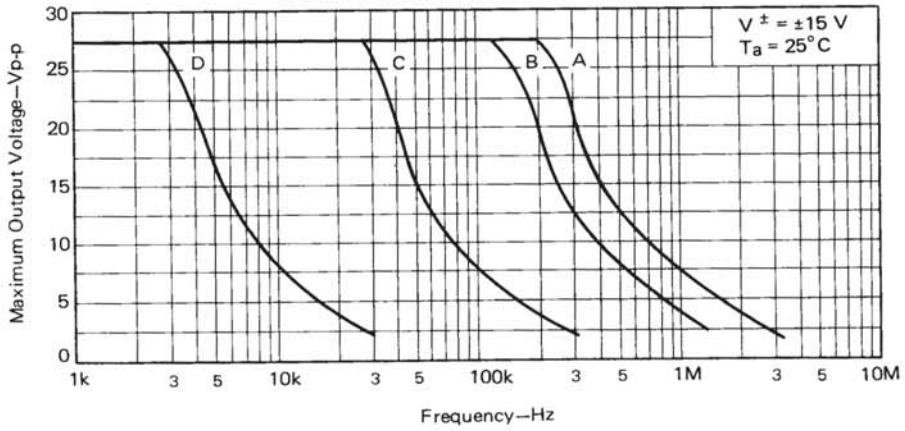

m-eps.jp